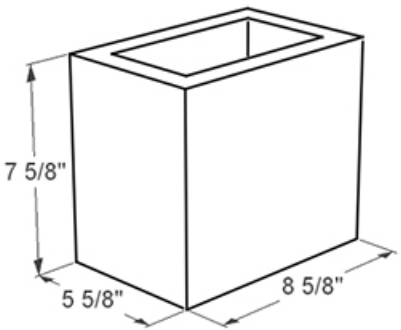
7 5/8"
5 5/8"
8 5/8"