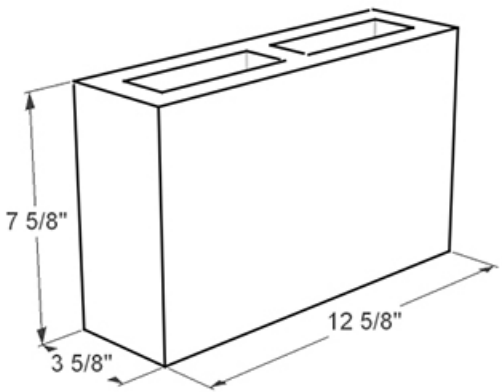
7 5/8"
12 5/8"
3 5/8"