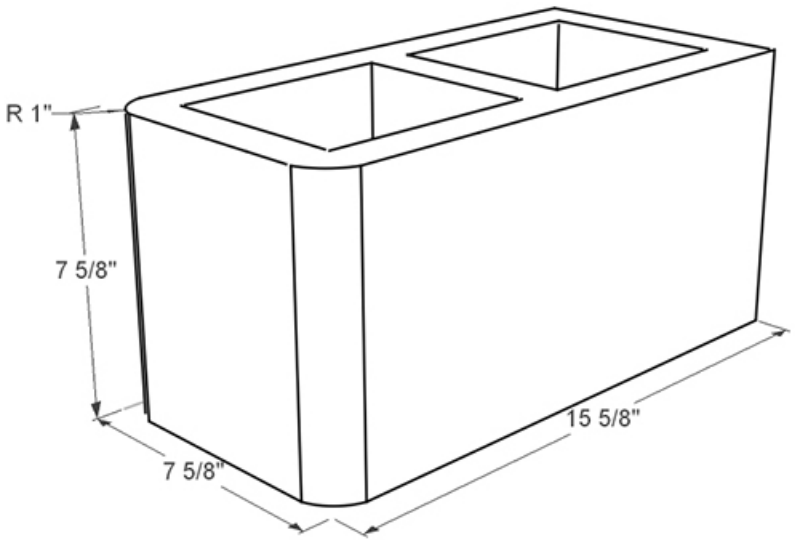
R 1"
7 5/8"
7 5/8"
15 5/8"