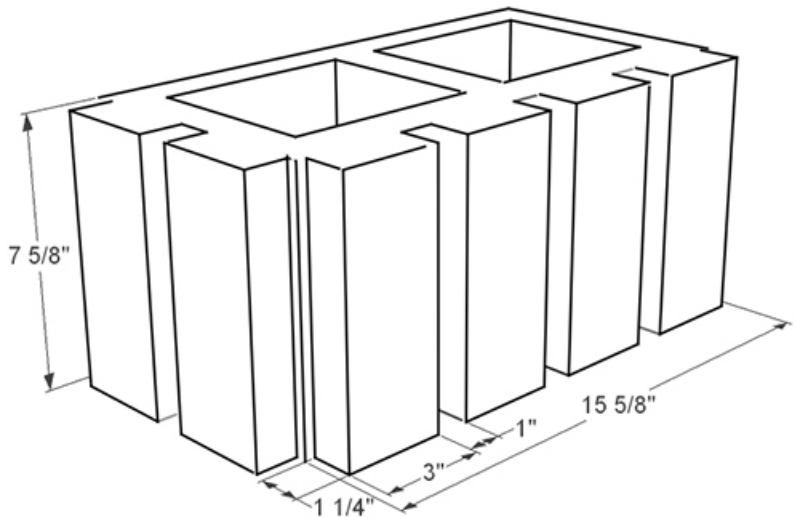
7 5/8"
15 5/8"
1"
3"
1 1/4"