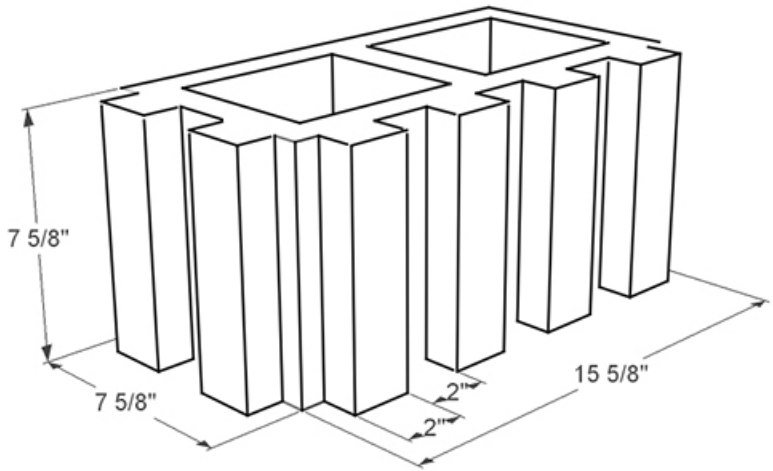
7 5/8"
7 5/8"
2"
2"
15 5/8"