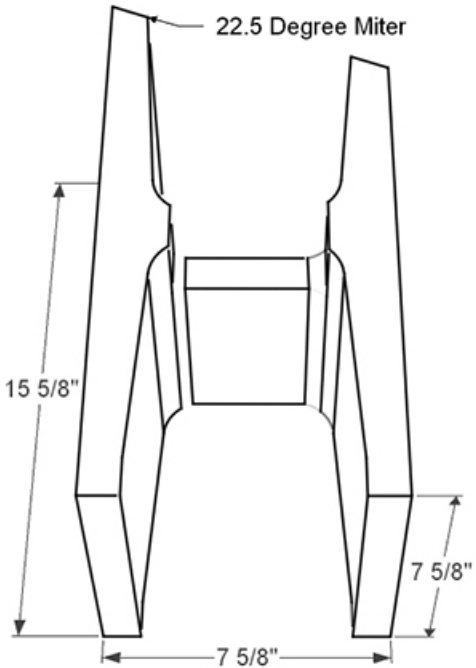
22.5 Degree Miter
15 5/8"
7 5/8"
7 5/8"