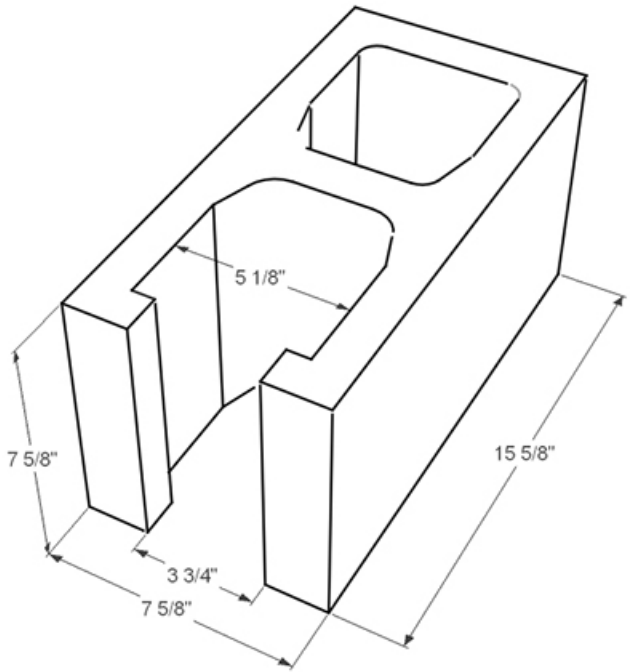
5 1/8"
7 5/8"
15 5/8"
3 3/4"
7 5/8"