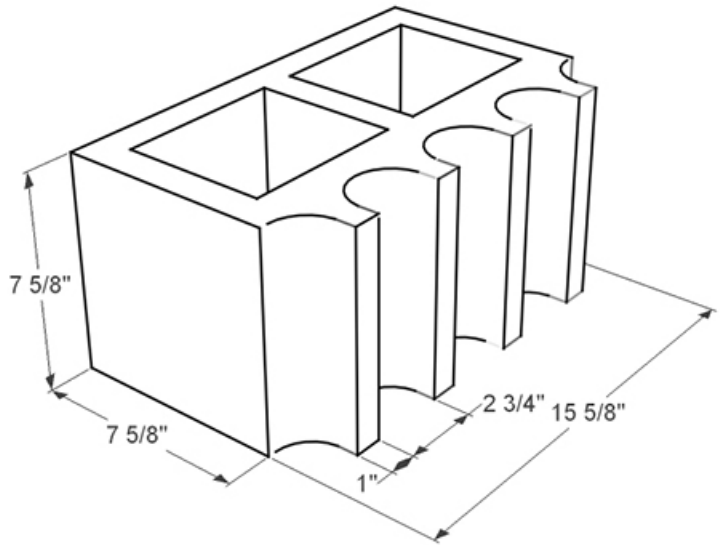
7 5/8"
7 5/8"
2 3/4"
15 5/8"
1"