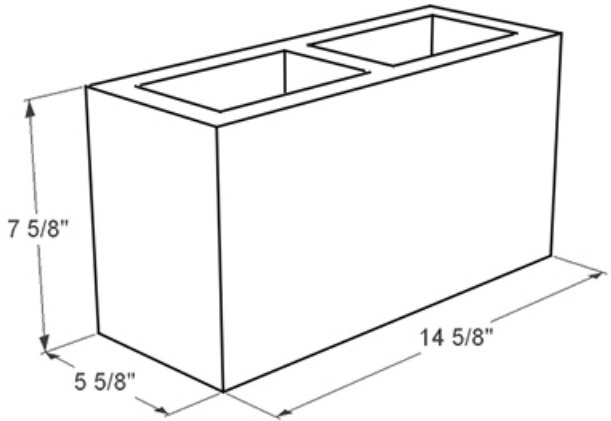
7 5/8"
5 5/8"
14 5/8"