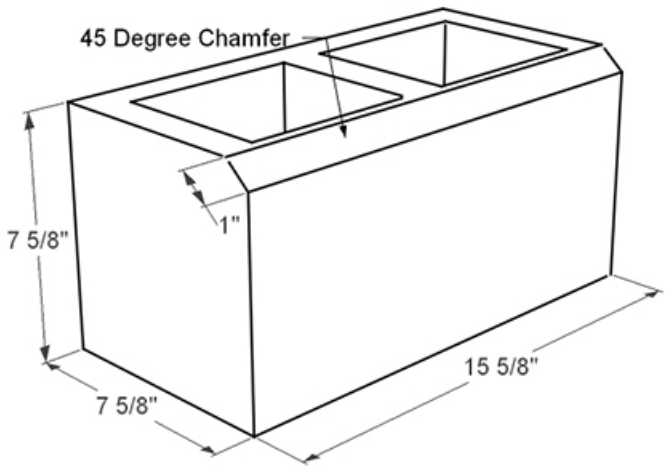
45 Degree Chamfer
1"
7 5/8"
7 5/8"
15 5/8"