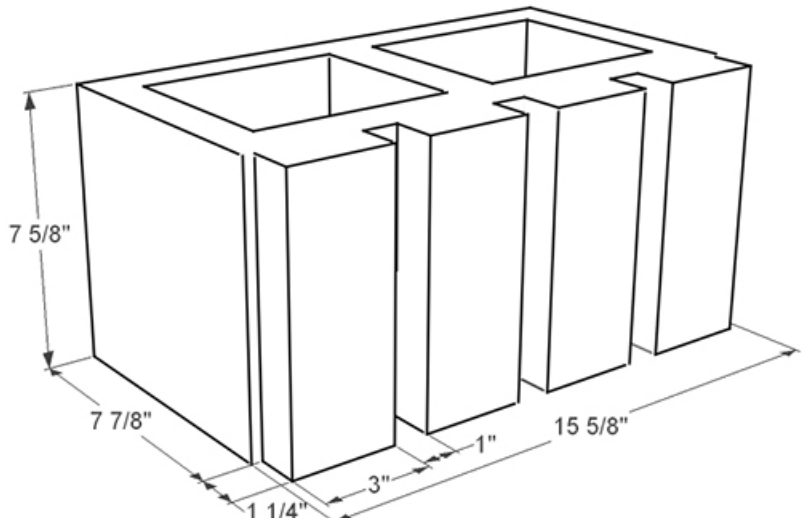
7 5/8"
7 7/8"
1 1/4"
3"
1"
15 5/8"