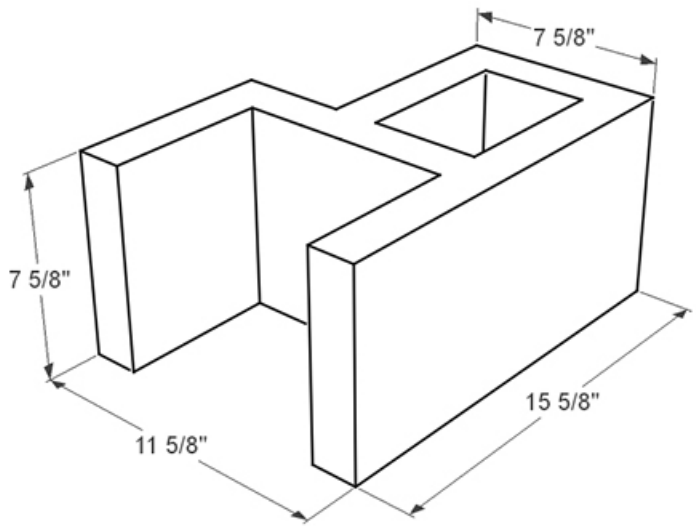
7 5/8"
7 5/8"
11 5/8"
15 5/8"