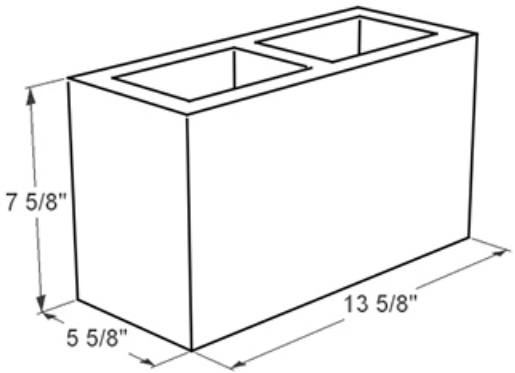
7 5/8"
5 5/8"
13 5/8"