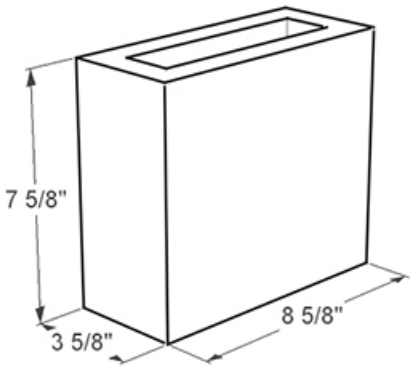
7 5/8"
3 5/8"
8 5/8"