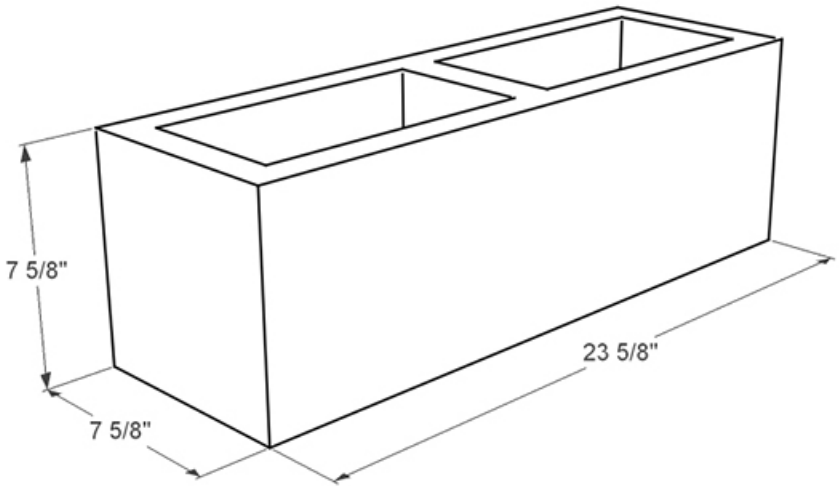
7 5/8"
7 5/8"
23 5/8"