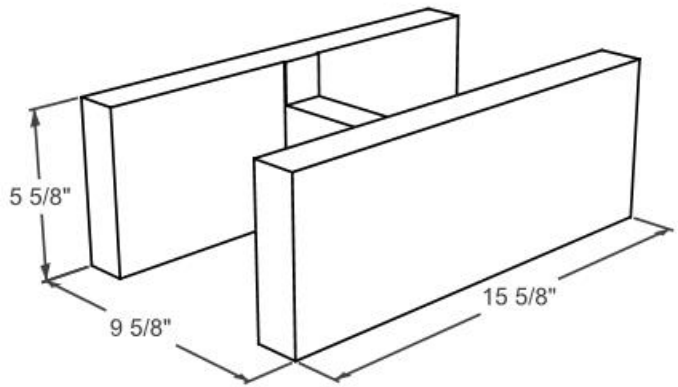
5 5/8"
9 5/8"
15 5/8"