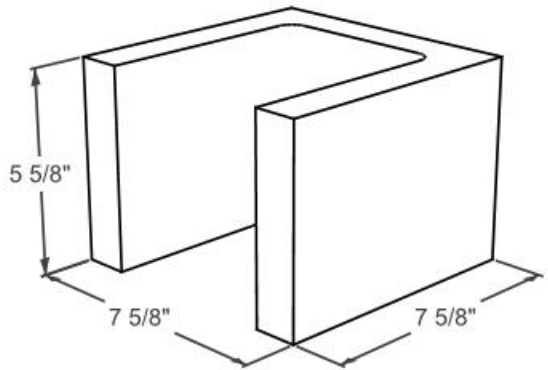
5 5/8"
7 5/8"
7 5/8"