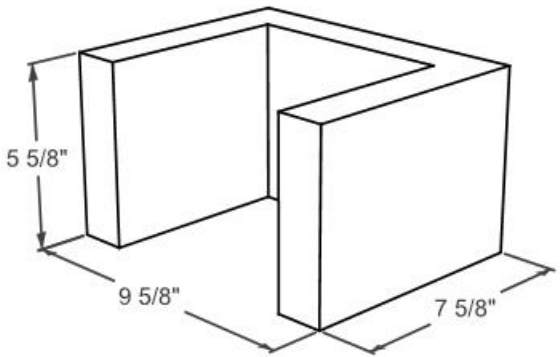
5 5/8"
9 5/8"
7 5/8"