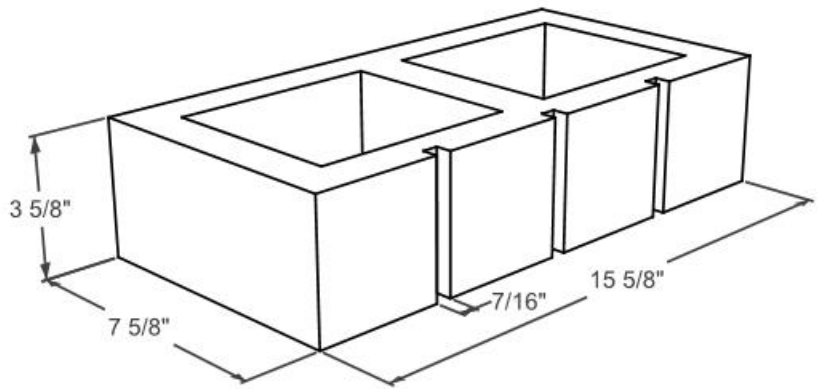
3 5/8"
7 5/8"
7/16"
15 5/8"