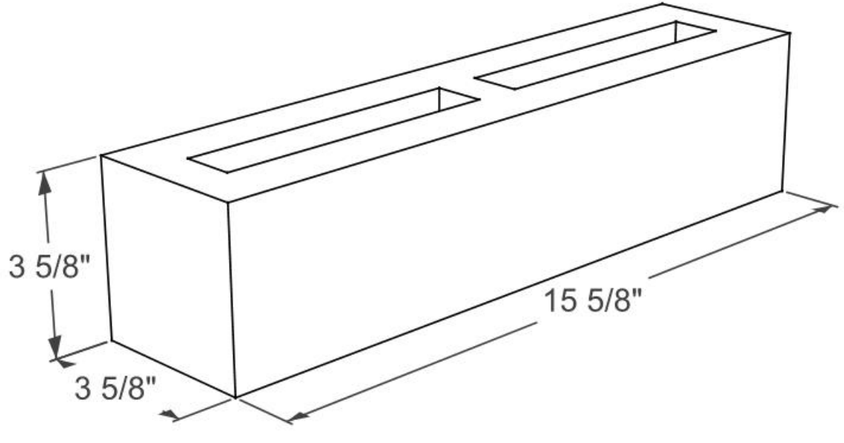
3 5/8"
3 5/8"
15 5/8"