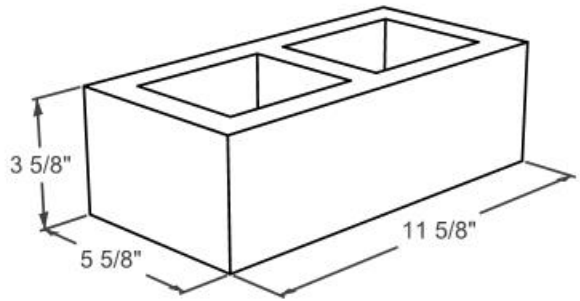
3 5/8"
5 5/8"
11 5/8"