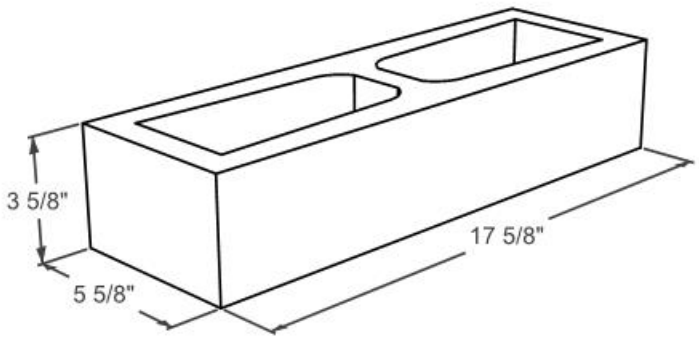
3 5/8"
5 5/8"
17 5/8"