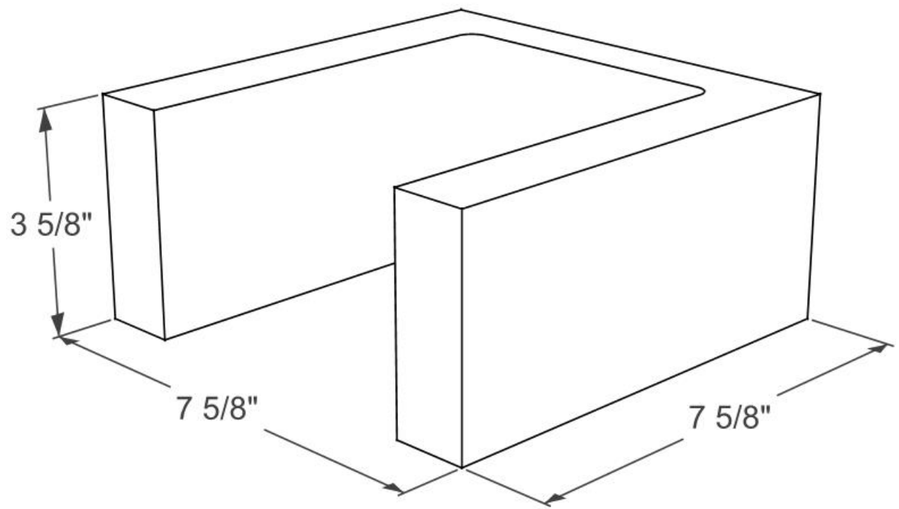
3 5/8"
7 5/8"
7 5/8"