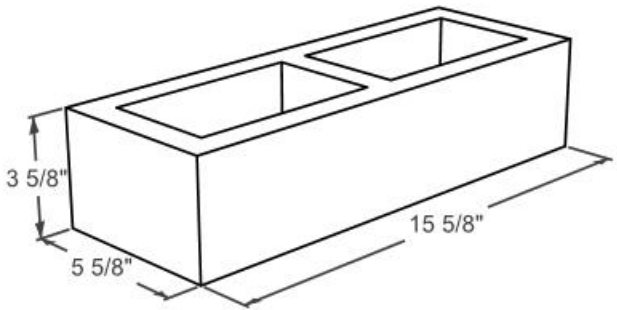
3 5/8"
5 5/8"
15 5/8"